Balance drum design

COPY COMPLIANT to the original document resident on the computer system at the time of printing

Index

1. Purpose 3
2. Scope. 3
3. General procedure: description. 3
4. Calculation method. 4
4.1. Annular seal. 4
4.2. Restriction orifice. 6
4.3. Balance disc 7
4.4. Pressure loss along impeller's shroud 9
4.4.1. Gulich's simplified method 9
4.4.2. Gulich's complete method 11
4.5. Balance drum's axial thrust 13
5. Acceptance Criteria. 14
6. Design recommendations. 14
7. References 14
8. Appendix. 15
8.1. Calculation Tool. 15

COPY COMPLIANT to the original document resident on the computer system at the time of printing

1. Purpose

This document describes how to size the balance drum in terms of external diameter and the restriction orifice to be installed in the relevant line, in horizontal multi-stage pump.

The procedure is applicable to the plant of Nova Milanese and the plant of La Spezia.

2. Scope.

This procedure is applicable to horizontal multi-stage pumps equipped with balance drum.

3. General procedure: description.

The balance drum is an axial thrust balancing device. It is designed to reduce the rotor axial thrust to the extent that it is safely and reliably carried by the thrust bearing (refer to *Figure 3.1* for reference).

The high pressure of the impeller outlet (reduced by the losses along the impeller's rear shroud) acts on the upstream side of the drum. Instead, downstream the drum, it is foreseen a balancing chamber at lower pressure (typically 6-8 bar greater than the suction pressure), which is regulated by means of the dedicated balancing line routed to the pump suction through a restriction orifice. This pressure difference acting on the drum's sides generates a force directed in the opposite direction respect to the axial thrust of the pump rotor. In this way, the total residual axial thrust can be significantly reduced, affecting positively the thrust bearing's sizing and design.

For this reason, the design of the balance drum device is a critical activity.

In this phase, the dimensions of the drum (in terms of external diameter, radial clearance, external surface finishing) and the pressure in the balance chamber (selecting properly the restriction orifice's diameter) shall be duly selected, in order to optimize the residual axial force.

COPY COMPLIANT to the original document resident on the computer system at the time of printing

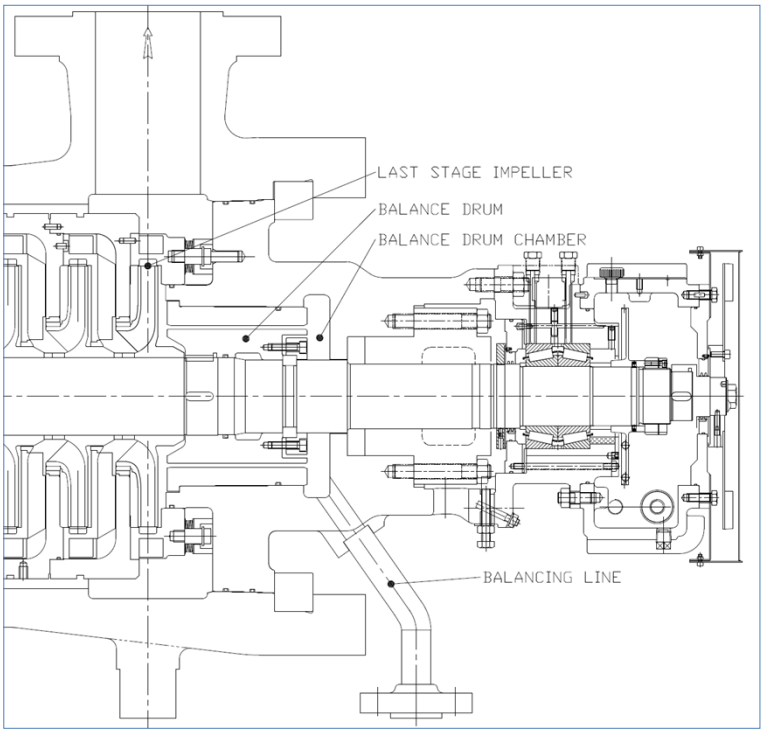

Figure 3.1 Pump with balance drum.

4. Calculation method.

The hydraulic circuit considered in the calculation is made by the following consecutive components: balancing drum (modelled as annular seal) and balancing line with relevant restriction orifice. In the following the criteria adopted for the calculation are described.

4.1. Annular seal.

The leakages and the pressure drop across bushing and shaft seat on suction casing are studied based on *J. F. Gulich's Centrifugal Pumps*.

The criteria are defined based on the following formulas (ref. *J. F. Gulich's Centrifugal Pumps 3.7.9*).

COPY COMPLIANT to the original document resident on the computer system at the time of printing

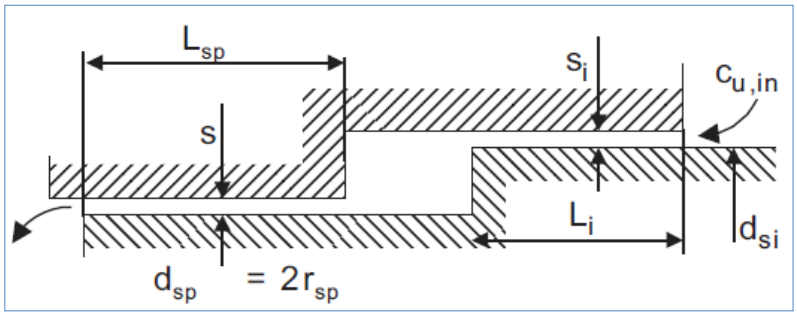

Figure 4.1 Typical annular seal.

$$Re_u = \frac{2\, s\, u_{sp}}{\nu}$$

$$u_{sp} = \frac{\pi\, d_{sp}\, n}{60}$$

$$Re = \frac{2\, s\, c_{ax}}{\nu}$$

Where **Re_u** and **Re** are Reynolds numbers calculated based on tangential and axial fluid speeds respectively, **s** is the radial clearance of the annular seal, **u_{sp}** is the velocity of the external surface of the annular seal, **d_{SP}** the diameter of the annular seal, **c_{ax}** is the fluid axial speed flowing through the seal, **v** is the kinematic viscosity.

Based on the above-mentioned data, the friction coefficient is calculated (ref. *J. F. Gulich's Centrifugal Pumps 3.7.11-12*).

$$\lambda_0 = \frac{96}{Re}\left(1 - 0.6\frac{e_x}{s}\right), for\ laminar\ flow, use\ for\ Re < 2000\ (u_{sp} = 0)$$

$$\lambda_0 = \frac{0.31}{\left\{\log\left(A + \frac{6.5}{Re}\right)\right\}^2}, for\ turbulent\ flow, use\ for\ Re > 2000\ (u_{sp} = 0)$$

Seal surface	A
Rough	0.135 ε/s
Serrated	0.005 to 0.01
Isotropic pattern	0.01 to 0.03

COPY COMPLIANT to the original document resident on the computer system at the time of printing

Where λ_0 is the fiction coefficient for laminar (Re < 2000) or turbulent (Re > 2000) flow, not considering the rotational speed (u_{sp} = 0). In case of laminar – turbulent transition, it is recommended to use the maximum λ_0 among the above calculated ones. The term e_x is the eccentricity (usually equal to 0).

The effect of the rotational speed is evaluated in the definition of the corrected friction coefficient **λ** (ref. *J. F. Gulich's Centrifugal Pumps 3.7.13-14*).

$$\frac{\lambda}{\lambda_0} = 1 + 0.2\left(\frac{Re_u}{2000}\right)^{1.03}, influence\ of\ rotation\ for\ laminar\ flow\ (Re < 2000)$$

$$\frac{\lambda}{\lambda_0} = \left\{1 + 0.19\left(\frac{Re_u}{Re}\right)^2\right\}^{0.375}, influence\ of\ rotation\ for\ turbulent\ flow\ (Re > 2000)$$

The pressure drop across the annular seal is estimated through the following formula (ref. *J. F. Gulich's Centrifugal Pumps 3.7.6*).

$$c_{ax} = \sqrt{\frac{2\,\Delta p}{\zeta_{EA} + \lambda\frac{L_{sp}}{2s}}}$$

Where:

- $\mathbf{c_{ax}}$ is the fluid axial speed in the gap.
- $\mathbf{L_{sp}}$ the annular seal's length.
- **s** the radial gap.
- $\boldsymbol{\zeta_{EA}}$ the inlet and outlet losses coefficient (from 1 to 1.2).

4.2. Restriction orifice.

The leakage flow and the pressure drop across the restriction orifice are estimated based on the *ISO 5167-2* Standard.

The discharge coefficient **C** is given by *Reader-Harris/Gallagher's equation* (ref. *ISO 5167-2 sect. 5.3.2.1*).

$$C = 0.5961 + 0.0261\beta^2 - 0.216\beta^8 + 0.000521\left(\frac{10^6\beta}{Re_D}\right)^{0.7} + (0.0188 + 0.0063A)\beta^{3.5}\left(\frac{10^6}{Re_D}\right)^{0.3} +$$

COPY COMPLIANT to the original document resident on the computer system at the time of printing

$$+\left(0.043+0.80e^{-10L_1}-0.123e^{-7L_1}\right)(1-0.11A)\frac{\beta^4}{1-\beta^4}-0.031\left(M_2-0.8M_2^{1.1}\right)\beta^{1.3}$$

If D < 71.12mm (2.8 inch), the following term shall be added to the above reported equation:

$$+0.011(0.075-\beta)\left(2.8-\frac{D}{25.4}\right)$$

Where:

- **β** is the ratio between the orifice diameter d and the pipe diameter D.
- **Re_D** is the Reynolds number calculated on the pipe section.
- **$L_1=l_1/D$** with l_1 the distance of the upstream tapping from the upstream face of the plate.
- **$L_2=l_2/D$** with l_2 the distance of the downstream tapping from the downstream face of the plate.
- **M_2** and **A** are defined as in the following:

$$M_2=\frac{2L_2}{1-\beta}$$

$$A=\left(\frac{19000\beta}{Re_D}\right)^{0.6}$$

In the application, the coefficients L_1, L_2 are usually equal to zero.

The pressure drop across the orifice is extracted from the following (ref. *ISO 5167-2 sect. 4*).

$$q_m=\frac{C}{\sqrt{1-\beta^4}}\varepsilon\frac{\pi}{4}d^2\sqrt{2\Delta p\,\rho_1}$$

Where **q_m** is the mass flowrate; ε is the expansibility factor, whose effect is negligible (equal to 1) for the applicable cases of this procedure.

4.3. Balance disc

The balancing disc is studied based on J. F. Gulich's formulas for the calculation of leakages in the radial gap (ref. *J. F. Gulich's Centrifugal Pumps 3.7.21*).

$$Re=\frac{2\,s\,c_i}{\nu}\sqrt{a_r}$$

$$Re_u=\frac{2\,s\,\omega\,r_a}{\nu}\sqrt{a_r}$$

COPY COMPLIANT to the original document resident on the computer system at the time of printing

$$a_r = \frac{r_i}{r_a}$$

Where:

- **Re_u** and **Re** are Reynolds numbers calculated based on tangential and radial fluid speeds respectively.
- **c_i** is the fluid radial speed, **r_r** and **r_a** are the respectively the internal and the external disc diameters.
- **s** is the axial gap between disc and counter disc.
- **ω** is the rotational speed.
- **v** is the fluid kinematic viscosity.

Based on the above-mentioned data, the friction coefficient is calculated (ref. *J. F. Gulich's Centrifugal Pumps 3.7.11-12*).

$$\lambda_0 = \frac{96}{Re}\left(1 - 0.6\frac{e_x}{s}\right), for\ laminar\ flow, use\ for\ Re < 2000\ (u_{sp} = 0)$$

$$\lambda_0 = \frac{0.31}{\left\{\log\left(A + \frac{6.5}{Re}\right)\right\}^2}, for\ turbulent\ flow, use\ for\ Re > 2000\ (u_{sp} = 0)$$

Seal surface	A
Rough	0.135 ε/s
Serrated	0.005 to 0.01
Isotropic pattern	0.01 to 0.03

Where **λ_0** is the fiction coefficient for laminar (Re < 2000) or turbulent (Re > 2000) flow, not considering the rotational speed (u_{sp} = 0). In case of laminar – turbulent transition, it is recommended to use the maximum λ_0 among the above calculated ones.

The effect of the rotational speed is evaluated in the definition of the corrected friction coefficient **λ** (ref. *J. F. Gulich's Centrifugal Pumps 3.7.13-14*).

COPY COMPLIANT to the original document resident on the computer system at the time of printing

$$\frac{\lambda}{\lambda_0} = 1 + 0.2\left(\frac{Re_u}{2000}\right)^{1.03} \text{, influence of rotation for laminar flow } (Re < 2000)$$

$$\frac{\lambda}{\lambda_0} = \left\{1 + 0.19\left(\frac{Re_u}{Re}\right)^2\right\}^{0.375} \text{, influence of rotation for turbulent flow } (Re > 2000)$$

The pressure drop across the annular seal is estimated through the following formula (ref. *J. F. Gulich's Centrifugal Pumps 3.7.6*).

$$c_{ax} = \sqrt{\frac{2\,\Delta p}{\zeta_{EA} + \lambda\frac{L_{sp}}{2s}}}$$

Where:

- **c_{ax}** is the fluid axial speed in the gap.
- **L_{sp}** is the annular seal's length.
- **S** is the radial gap.
- **ζ_{EA}** is the inlet and outlet losses coefficient (from 1 to 1.2).

4.4. Pressure loss along impeller's shroud

The fluid pressure in the chamber included between the last stage impeller and the balance drum is calculated as per *J. F. Gulich's Centrifugal Pumps*, considering the pressure drop along the impeller's rear shroud in case of radially inwards flow. The possible calculation methods are described in the following. As general recommendation, the complete calculation approach is the recommended one and shall be always used in the design advanced phase; the simplified method shall be used in the preliminary or pre-design phase.

4.4.1. Gulich's simplified method

For the axial thrust generated by the differential pressure across the impeller, the following approach shall be considered. As per *equation 3.7.2* from *J. F. Gulich's Centrifugal Pumps*, the rotation factors for radially inwards and outward condition are defined as in the following:

$$Re_{u_2} = \frac{u_2 \cdot D_2}{2 \cdot \upsilon}$$

COPY COMPLIANT to the original document resident on the computer system at the time of printing

$$y_{sp} = Re_{u_2}^{0.3} \cdot \frac{s_{sp} \cdot D_{sp}}{D_2^{\,2}} \cdot \sqrt{\frac{s_{sp}}{L_{sp}}}$$

$$k_{in} = 0.9 \cdot y_{sp}^{\;0.087}, if\ leakage\ radially\ inward$$

$$k_{out} = 0.24 \cdot y_{sp}^{\;-0.096}, if\ leakage\ radially\ outward$$

Where:

- **D_2 [m]** is the impeller diameter.
- **u_2 [m/s]** is the peripherical speed of the impeller.
- **υ [m²/s]** is the fluid kinematic viscosity.
- **D_{sp}**, **s_{sp}** and **L_{sp} [m]** are respectively the diameter, the radial clearance and the length of the annular seal.

The pressure drop across the seal is calculated based on *equation 3.7.3* for radially inwards flow or *equation 3.7.4* for radially outwards flow from *J. F. Gulich's Centrifugal Pumps*:

$$\Delta H_{sp} = H_p - H_{sp} - k_{in}^2 \cdot \frac{u_2^2}{2g} \cdot \left(1 - \frac{D_{sp}^2}{D_2^2}\right), if\ radially\ inwards$$

$$\Delta H_D = H - H_p - k_{out}^2 \cdot \frac{u_2^2}{2g} \cdot \left(1 - \frac{D_D^2}{D_2^2}\right), if\ radially\ outwards$$

Where:

- **D_2 [m]** is the impeller diameter.
- **D_{sp} [m]** and **D_D [m]** are the diameters of the wear rings in subject.
- **g [m/s²]** is the acceleration of gravity.
- **H [m]** is the total head of the impeller.
- **H_p [m]** is the static pressure head at the impeller's outlet. It is calculated as $H_p = H \cdot R_G$, where **R_G [-]** is the reaction factor.
- **H_{sp} [m]** is the pressure head at wear ring's outlet. In case of front wear ring, it is equal to zero; in case of back wear ring, it is equal to balance holes' chamber if balance holes are present or to stuffing box pressure if last stage impeller is studied.
- **k_{in} [-]** and **k_{out} [-]** are the rotation factors.
- **u_2 [m/s]** is the peripherical speed of the impeller.

COPY COMPLIANT to the original document resident on the computer system at the time of printing

The above pressure drops shall match with the equations from Section 4.1. In this case, it is possible to calculate the leakage flow and the pressure drop across impeller's shrouds.

COPY COMPLIANT to the original document resident on the computer system at the time of printing

4.4.2. Gulich's complete method

A different approach from J. F. Gulich's Centrifugal Pumps can be considered to evaluate the complete pressure distributions on the impeller's rear shroud.

The referenced formulas to be adopted are *9.1.1*, *9.1.3* and *9.1.5* from *J. F. Gulich's Centrifugal Pumps*:

$$\varphi_{sp} = \frac{Q_{sp}}{\pi \cdot r_2^2 \cdot u_2}$$

$$x = \frac{r}{r_2}$$

$$Re_{u_2} = \frac{u_2 \cdot r_2}{\upsilon}$$

$$k_0 = \frac{1}{1 + \left(\frac{r_w}{r_2}\right)^2 \sqrt{\left(\frac{r_w}{r_2} + 5\frac{t_{ax}}{r_2}\right)\frac{c_{f,w}}{c_{f,r}}}}$$

$$c_p = \frac{p - p_2}{\frac{\rho}{2} \cdot u_2^2}$$

Where:

- **$c_{f,w}$** and **$c_{f,r}$** are the friction coefficient on the shroud, respectively for the casing and for the impeller.
- **c_p [-]** is the pressure coefficient, which allows to calculate the pressure acting on the shroud.
- **k_0 [-]** is the rotation factor without flow through the impeller sidewall gap. In case of open gap, $r_w = r_2$ and $t_{ax} = 0$.
- **p [Pa]** and **p_2 [Pa]** are the pressures respectively at the external radius r_2 and at the radius r of the impeller.
- **Q_{sp} [m³/s]** is the leakage flowrate in the sidewall gap.
- **r [m]** is the generic radius in the impeller shroud, where the pressure p is calculated.
- **r_w [m]** and **t_{ax} [m]** are the radius and the axial length of the cylindrical part of the casing.
- **r_2 [m]** is the impeller's external radius.
- **u_2 [m/s]** is the peripherical speed of the impeller.

COPY COMPLIANT to the original document resident on the computer system at the time of printing

- **φ_{sp}** is the flow coefficient of impeller sidewall gap.
- **ρ [kg/m³]** is the fluid density.
- **υ [m²/s]** is the fluid kinematic viscosity.

Because of the above-mentioned definitions, the iterative approach *9.1.9*, *9.1.10* and *9.1.11* from *J. F. Gulich's Centrifugal Pumps* is adopted in case that $|\varphi_{sp}\ Re_u^{0.2}|>0.002$ for radially inwards flow:

a. **φ_{sp}** is positive.
b. The rotation factor **k** is calculated from outer to inner radius. The calculation starts with $k_E = c_{2u}/u_2$ in case of open sidewall gap or with k_z in case of defined gap (refer to *Figure 4.2* and *Figure 4.3*). The rotation factor is estimated as in the following:

$$k_E = \frac{c_{2u}}{u_2} = \frac{c_2}{u_2} \cdot \frac{\sin\ \beta_2 \cdot \cos\ \alpha_2}{\sin\ (\alpha_2 + \beta_2)}$$

Where:

- **u_2 [m/s]**, **c_2 [m/s]** and **c_{2u} [m/s]** are respectively the impeller circumferential velocity, the fluid absolute velocity and the fluid circumferential velocity at the impeller outlet.
- **α_2 [°]** is the angle between direction of circumferential and absolute velocity.
- **β_2 [°]** is the angle between relative velocity vector and the negative direction of circumferential velocity.

In case of open sidewall gap, it is assumed that the fluid enters the sidewall gap with the same pre-rotation at the impeller inlet and k_E is used. This is acceptable in case that the overlap between impeller shroud and casing (low x_{ov}) is not significant as well. Otherwise, in case that the overlap is relevant (high x_{ov}), the fluid enters the sidewall gap with a circumferential velocity close to 1/2 u_2, as an average between impeller's one (equal to u_2) and casing's one (equal to 0).

For this reason, in this case the asymptotic k_Z=0.5 is used.

COPY COMPLIANT to the original document resident on the computer system at the time of printing

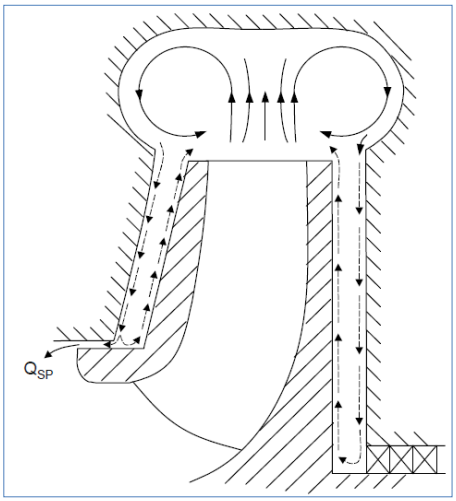

Figure 4.2 Typical open sidewall gap.

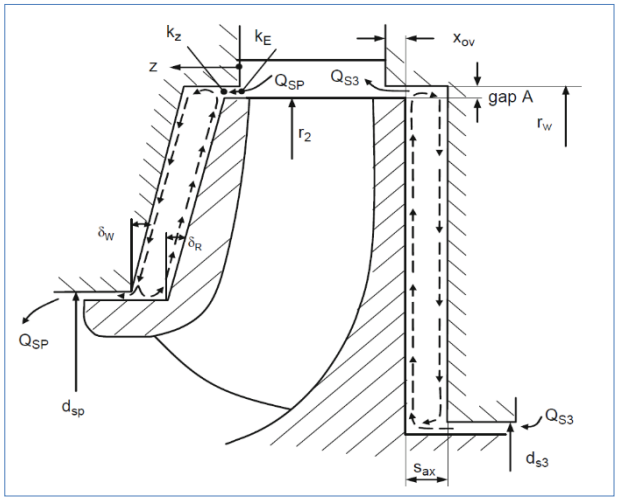

Figure 4.3 Typical sidewall with defined gap.

Because of the above, the step-wise method for the calculation of the pressure distribution is indicated in the following:

$$\frac{dk}{dx} = \frac{0.079 \cdot x^{1.6}}{\phi_{sp} \cdot Re_{u2}{}^{2}} \cdot \left\{ \left(\frac{1-k_0}{k_0} \cdot k \right)^{1.75} \cdot \frac{1}{\cos \delta_w} - |1-k|^{1.75} \cdot \frac{1}{\cos \delta_R} \right\}$$

$$k_{n+1} = k_n + \frac{dk}{dx} \cdot (x_{n+1} - x_n)$$

$$c_{p,n+1} = c_{p,n} + \left(x_n k_n^2 + x_{n+1} k_{n+1}^{\ 2} \right) \cdot (x_{n+1} - x_n)$$

Where:

- **δ_w [°]** and **δ_R [°]** are the shroud angle of the casing and of the impeller.

COPY COMPLIANT to the original document resident on the computer system at the time of printing

- **k [-]** is the rotation factor of fluid in impeller sidewall gap.

In case that $|\varphi_{sp}\ Re_u^{0.2}| \leq 0.002$, the rotation factor k is assumed equal to k_0.

4.5. Balance drum's axial thrust

The axial thrust acting on the balance drum is calculated referring to the following formula:

$$F_{bd} = \frac{\pi}{4} D_{bd}^{\ 2} \left(p_2^{\ *} - p_{bd}\right)$$

Where:

- **D_{bd} [m]** is the balance drum's external diameter.
- **p_2^* [Pa]** is the pressure upstream the balance drum, calculated as per Section 4.4.
- **p_{bd} [Pa]** is the pressure downstream the balance drum.

The calculated axial thrust is opposite in direction respect to the hydraulic axial thrust generated by the rotor.

5. Acceptance Criteria.

It is necessary to select the balance drum's dimensions (external diameter and radial clearance) and the restriction orifice's diameter, to have a differential pressure across the latter between 4 – 8 barg along all the pump operating range.

6. Design recommendations.

As general recommendation, the balance drum is typically designed to have a low residual axial thrust acting from the suction to the discharge side of the pump along all the operating range of the pump. During operation, the internal radial clearances on the wear components (including the drum) increases due to wear, generating a lower pressure drop across them. In the drum's case, this leads to higher pressure in the balance chamber and the balancing force starts to decrease, even becoming lower that the rotor hydraulic thrust. For this reason, the total residual axial thrust changes its direction but still is maintained at low levels.

The balance drum shall be selected to guarantee that the differential pressure across the restriction orifice is included between 4 – 8 bar, along all the pump operating range.

As per TPI's recommendation, the maximum threshold value before performing maintenance on the pump is 11 bars. This shall be considered in the estimation of the maximum working pressure in the stuffing box for the selection of the mechanical seal as well.

COPY COMPLIANT to the original document resident on the computer system at the time of printing

The balance drum's design and residual axial thrust calculation have significant impact on the thrust bearing selection and verification. For this reason, it is important to check the expected axial thrust in all the operating conditions, including when 11 bar differential pressure occurs across the balancing line's restriction orifice.

As design practice, as first tentative value in the calculation, the drum's diameter can be considered the same as the impellers' wear ring diameter.

7. Appendix.

7.1. Calculation Tool.

The following instructions shall be considered to carry out the calculation by means of the dedicated tool **Mod.531**:

1) Compile all the input data in all the dedicated sections:
2) Run the calculation with the dedicated button.
3) Check the results.

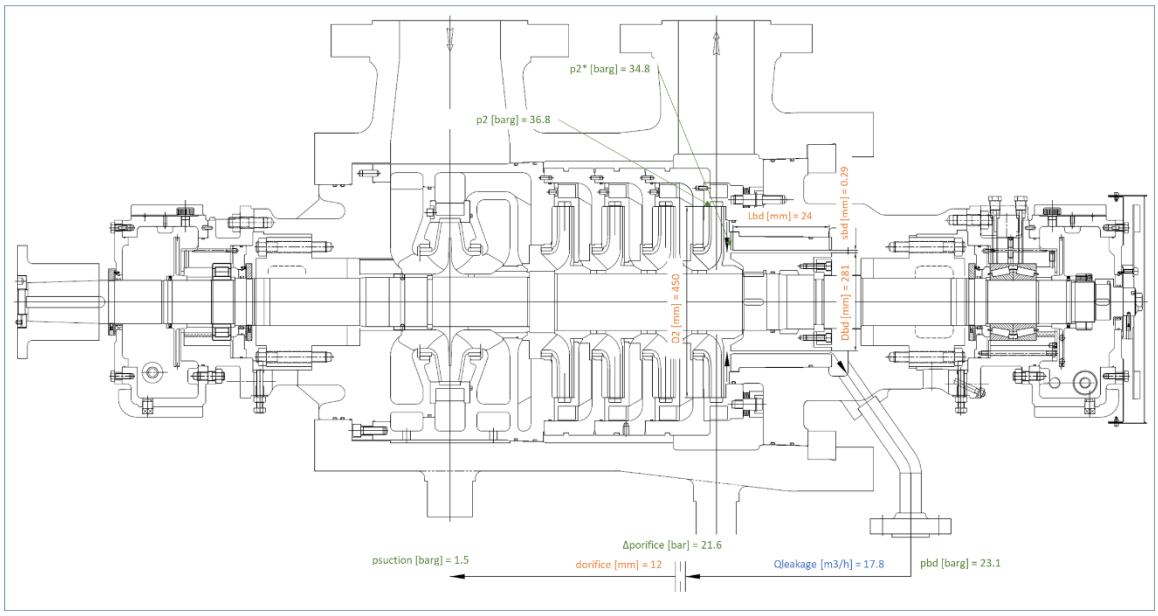

Figure 7.1 Example of results.

1. References

Centrifugal Pumps, J. F. Gulich, 4th Edition, 2020

ISO 5167-2, Measurement of fluid flow by means of pressure differential devices — Part 2: Orifice plates

***Mod.531** - Balance drum design*

COPY COMPLIANT to the original document resident on the computer system at the time of printing

COPY COMPLIANT to the original document resident on the computer system at the time of printing